TILE REDI® REDI TRENCH®

SINGLE CURB SHOWER PAN

MODEL RT3060R-PVC-SQPC

(Not to scale)

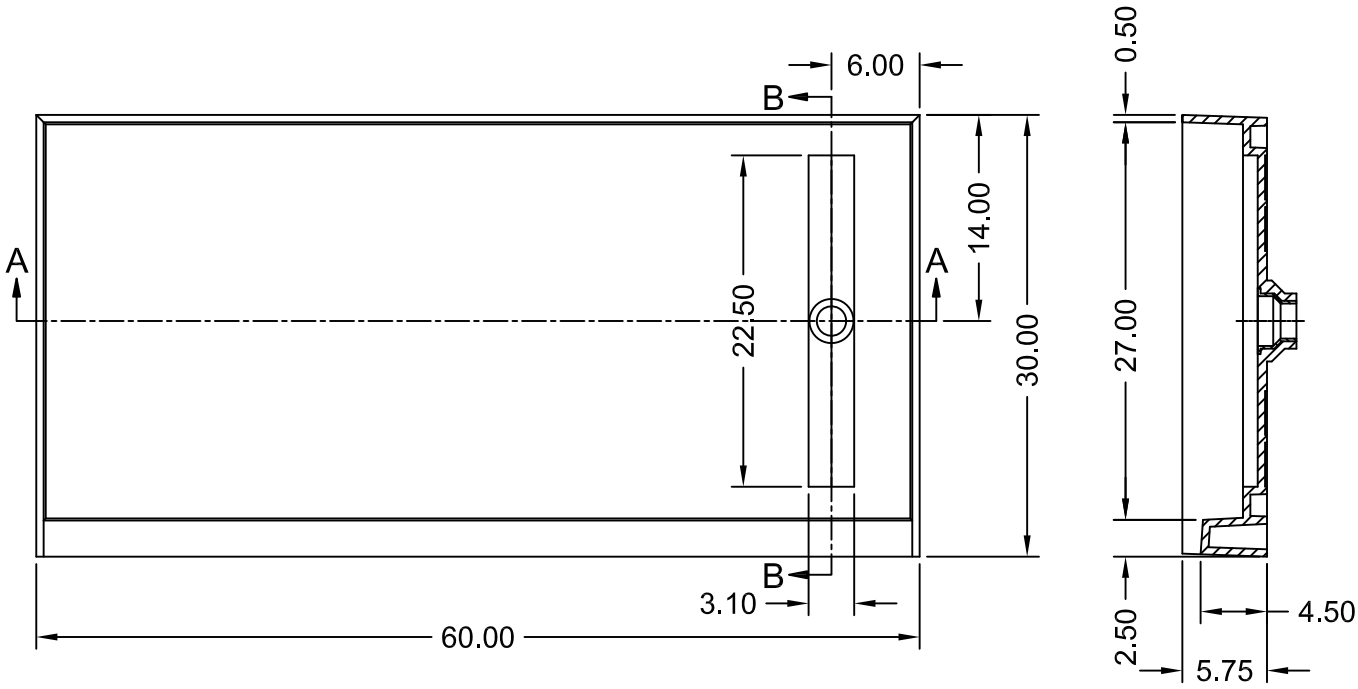

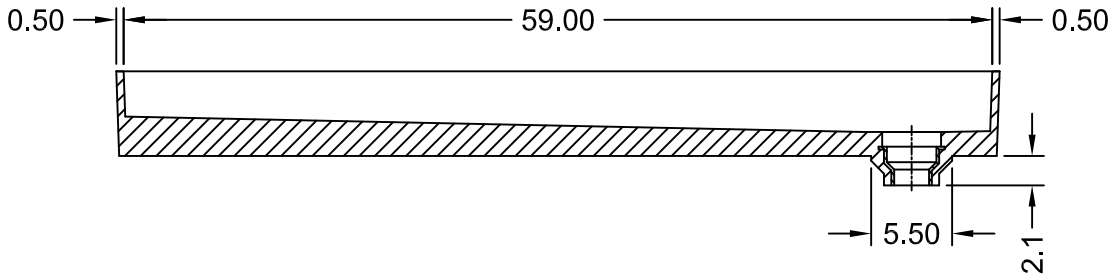

SECTION A-A

ANSI Z124.1-95 ANSI Z124.2-95 ICC/ANSI A117.1.98	ASTM F462-79 B45.0-02 B45.5-02	

Toll Free 800.232.6156
Tel: 954.323.0125
Fax: 954.344.8064
techsupport@tileredi.com
www.tileredi.com

tile redi® Perfection through Innovation

2014.04.25

© 2014 TILE REDI USA, LLC