TILE REDI® REDI TRENCH® DOUBLE CURB SHOWER PAN

MODEL RT3360LDR-PVC-SQPC

(Not to scale)

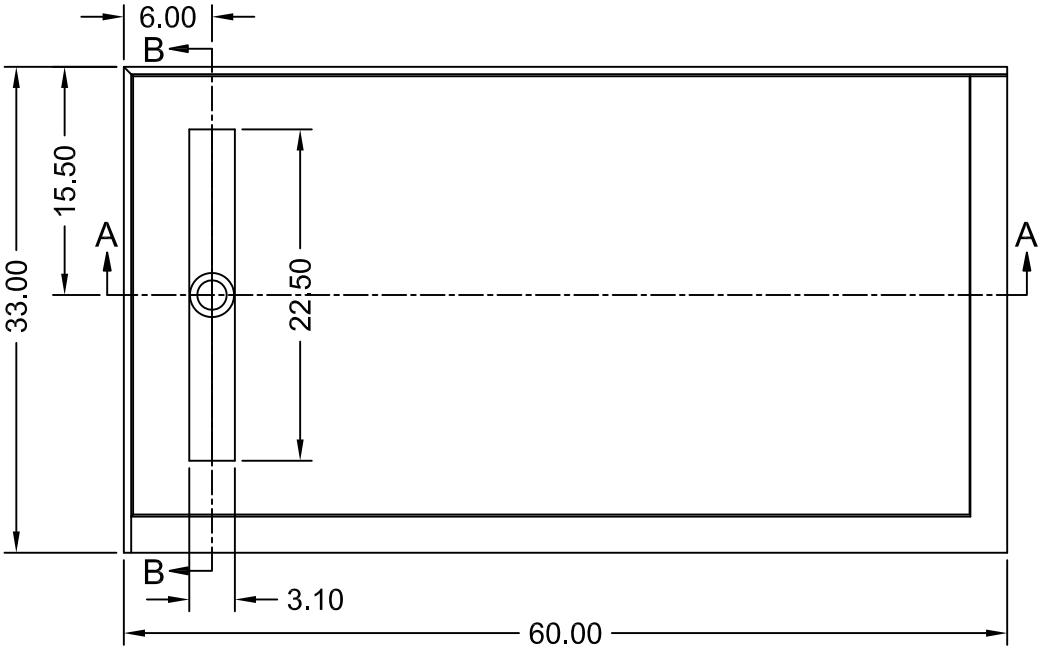

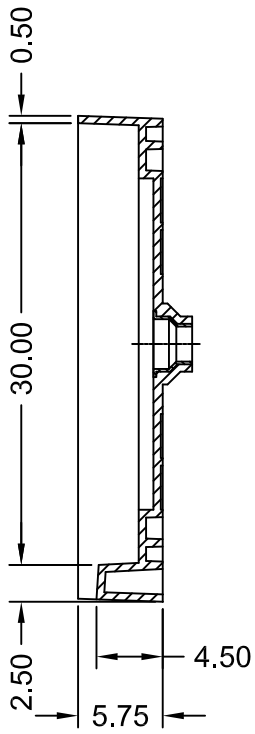

SECTION B-B

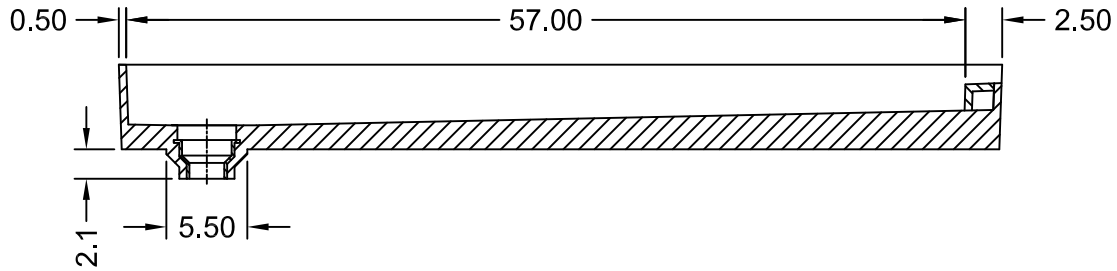

SECTION A-A

ANSI Z124.1-95 ASTM F462-79
ANSI Z124.2-95 B45.0-02
ICC/ANSI A117.1.98 B45.5-02

Toll Free 800.232.6156 techsupport@tileredi.com
Tel: 954.323.0125
Fax: 954.344.8064 www.tileredi.com

tile redi® Perfection through Innovation

2014.04.25

© 2014 TILE REDI USA, LLC