TILE REDI® REDI TRENCH®

DOUBLE CURB SHOWER PAN

MODEL RT3460LDR-PVC-BN3

(Not to scale)

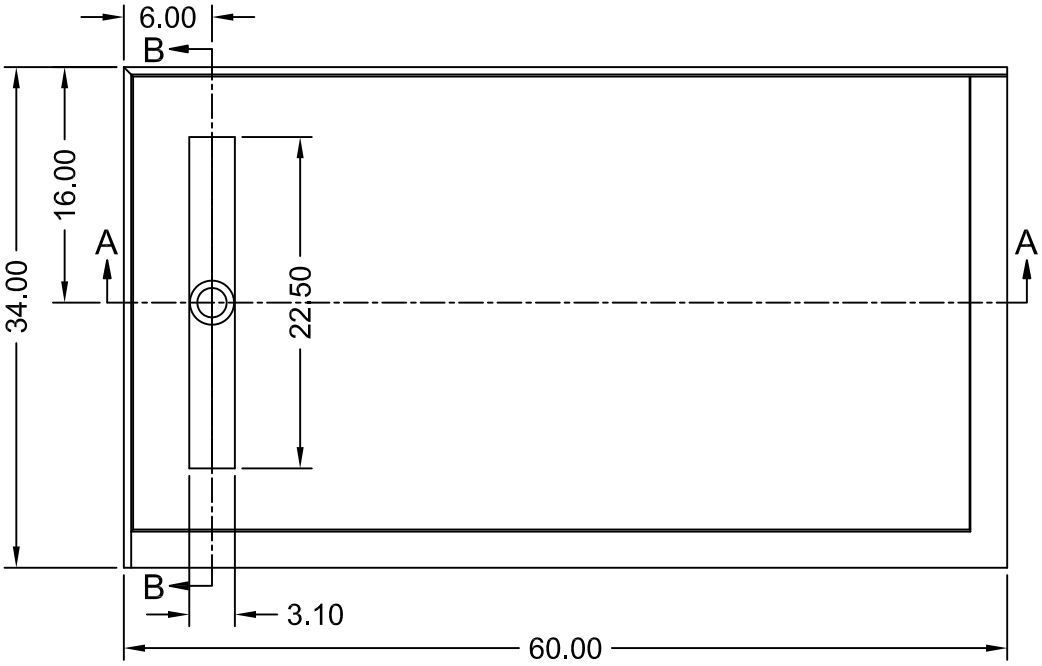

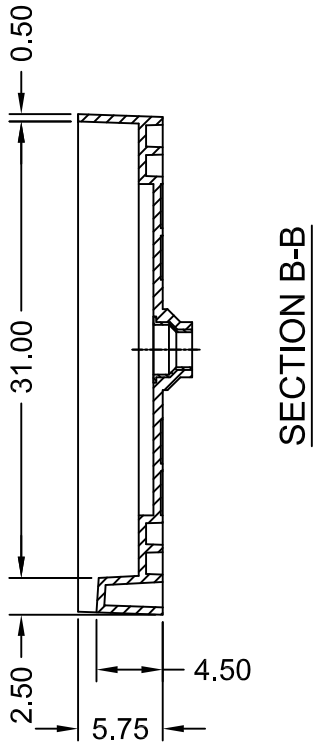

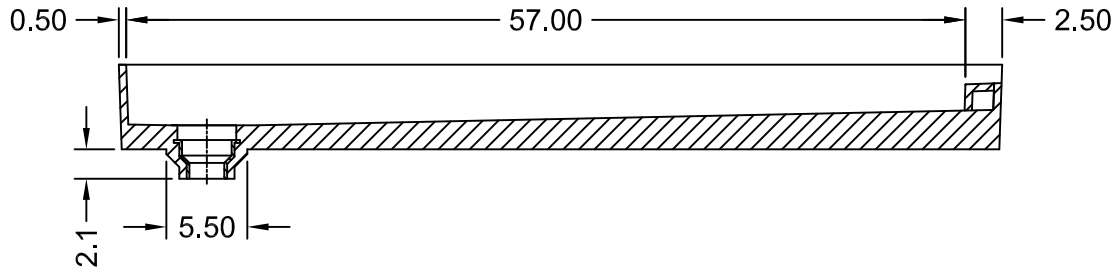

SECTION A-A

ANSI Z124.1-95	ASTM F462-79	
ANSI Z124.2-95	B45.0-02	
ICC/ANSI A117.1.98	B45.5-02	

Toll Free 800.232.6156
Tel: 954.323.0125
Fax: 954.344.8064
techsupport@tileredi.com
www.tileredi.com

tile redi® Perfection through Innovation

2014.04.25

© 2014 TILE REDI USA, LLC