TILE REDI® REDI TRENCH®

INVENTORY
SHOWER PAN

MODEL
RT4872R-PVC-OB

(Not to scale)

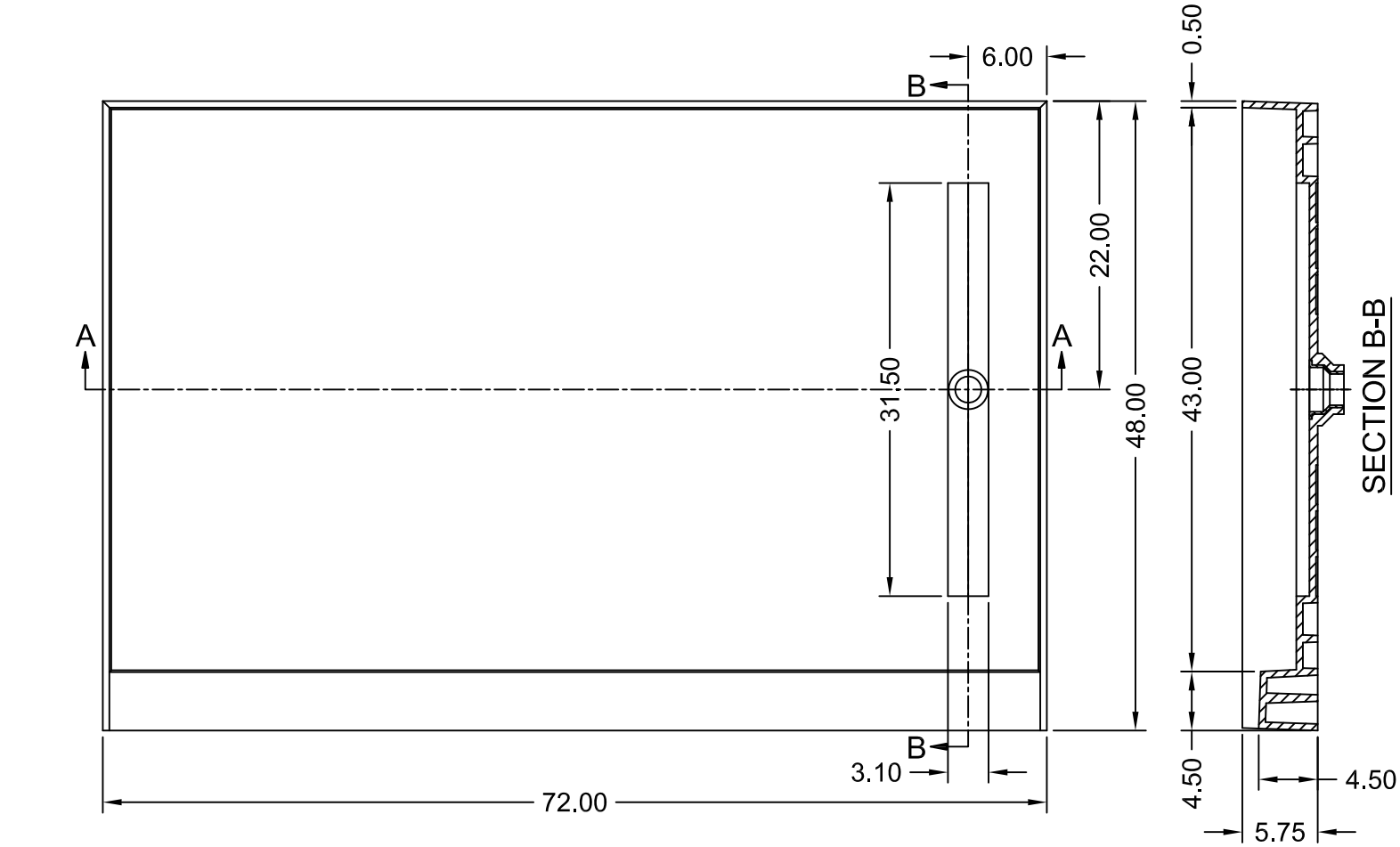

SECTION A-A

ANSI Z124.1-95 ASTM F462-79
ANSI Z124.2-95 B45.0-02
ICC/ANSI A117.1.98 B45.5-02

Toll Free 800.232.6156 techsupport@tileredi.com
Tel: 954.323.0125
Fax: 954.344.8064 www.tileredi.com

tile redi® Perfection through Innovation

2015.08.24

© 2014 TILE REDI USA, LLC