TILE REDI® REDI YOUR WAY®

MODEL
RYWWD4248C-PVC

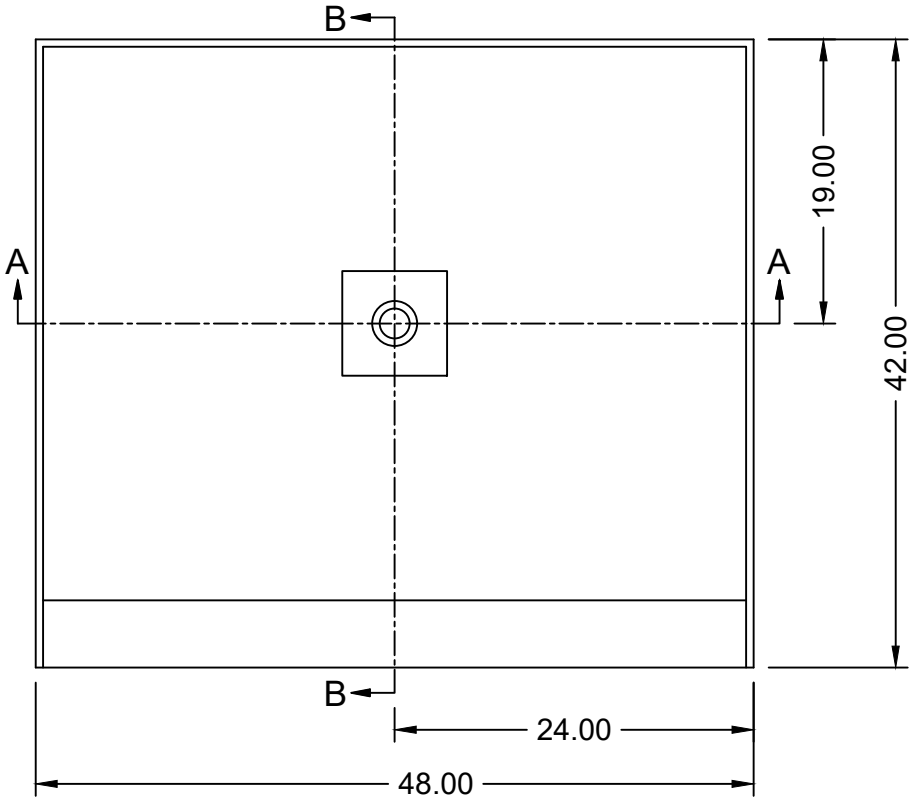

TOP VIEW

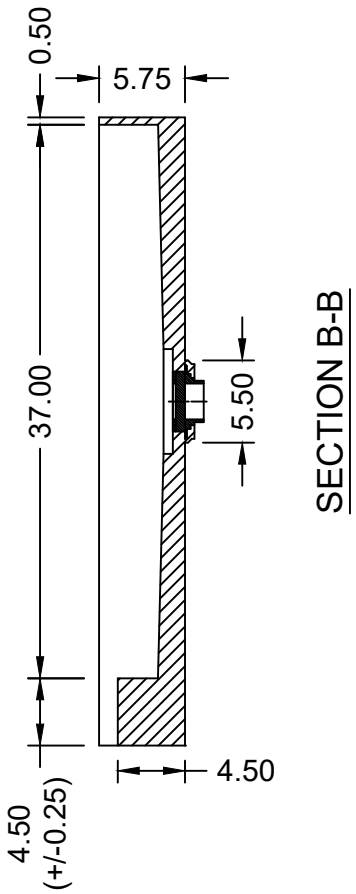

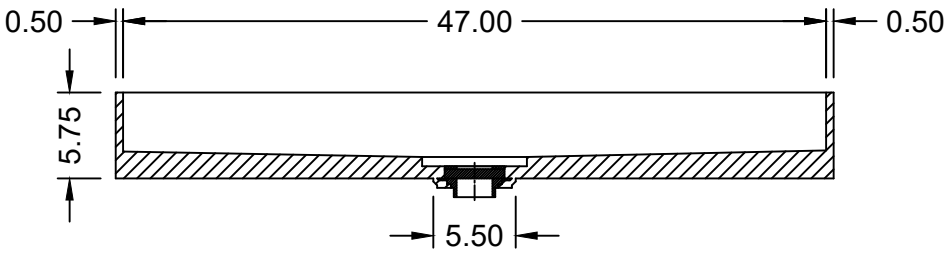

SECTION A-A

All dimensions are within tolerances of -0.25" to +0.0625" unless otherwise noted.

ASTM D 4551 SEC.11.1 | ASTM D 4551 SEC.11.3
ASTM D 4551 ANNEX A1 | ASTM D 4551 SEC.11.4
ASTM D 4551 ANNEX A2 | ASTM D 4551 ANNEX A3
ASTM 4551 ANNEX A5 | ANSI Z124.1.2
ANSI A118.1 | ASTM D 1037 | ASTM D1623
Product is in compliance with the International Plumbing Code

Toll Free 800.232.6156
Tel: 954.323.0125
Fax: 954.344.8064
techsupport@tileredi.com
www.tileredi.com

INV
2021.04.13

© 2021 TILE REDI USA, LLC DRAWN BY: RT